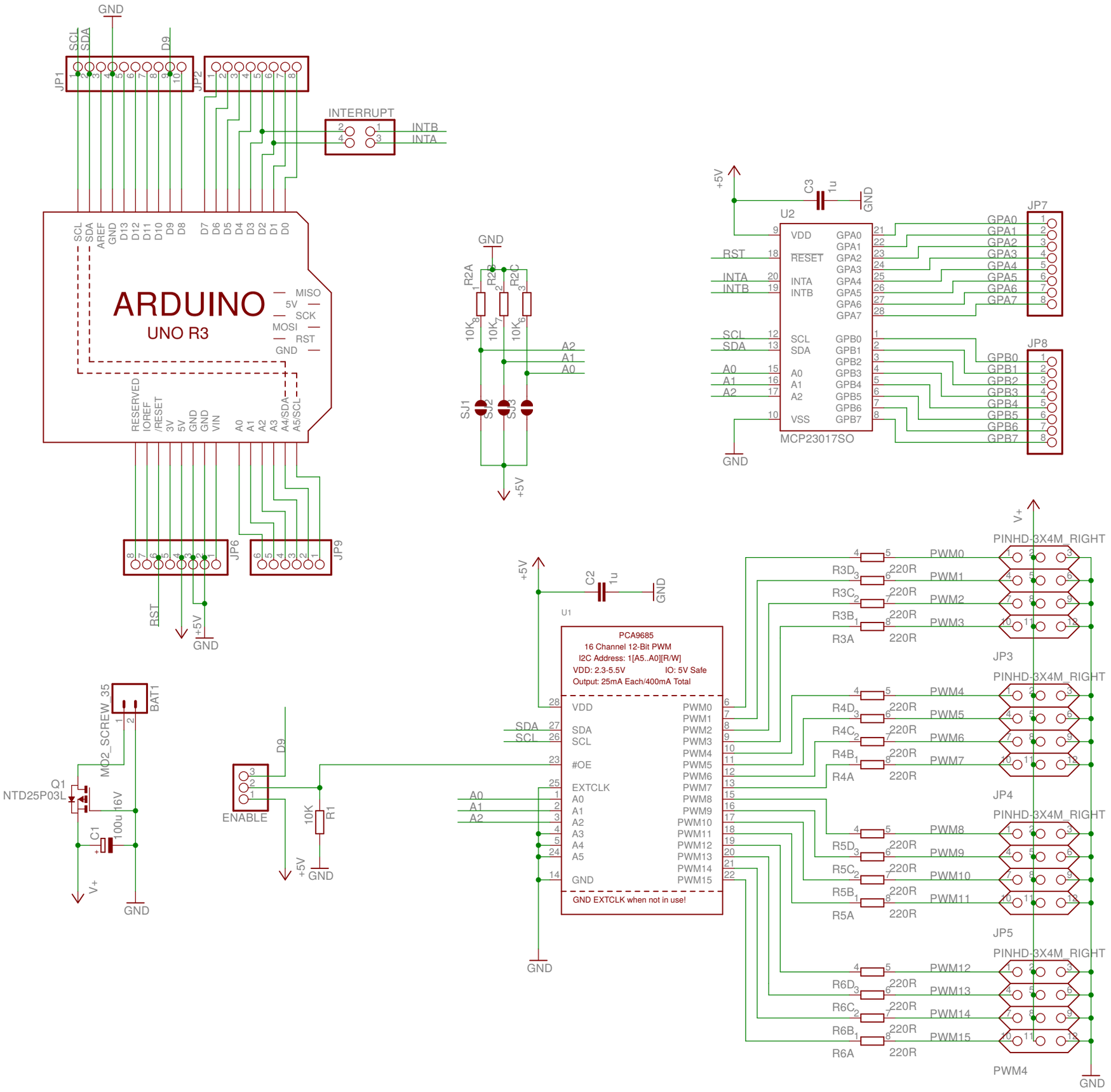
ARDUINO
UNO R3
JP1
JP2
INTERRUPT
INTB
INTA
GND
SCL
SDA
D9
MISO
5V
SCK
MOSI
RST
RESERVED
IOREF
/RESET
3V
5V
GND
GND
VIN
A0
A1
A2
A3
A4/SDA
A5/SCL
JP6
JP9
R2A
R2B
R2C
10K
SJ1
SJ2
SJ3
+5V
C3
1u
U2
MCP23017SO
VDD
RESET
INTA
INTB
SCL
SDA
A0
A1
A2
VSS
GPA0
GPA1
GPA2
GPA3
GPA4
GPA5
GPA6
GPA7
GPB0
GPB1
GPB2
GPB3
GPB4
GPB5
GPB6
GPB7
JP7
JP8
C2
U1
PCA9685
16 Channel 12-Bit PWM
I2C Address: 1[A5..A0][R/W]
VDD: 2.3-5.5V
IO: 5V Safe
Output: 25mA Each/400mA Total
#OE
EXTCLK
GND EXTCLK when not in use!
PWM0
PWM1
PWM2
PWM3
PWM4
PWM5
PWM6
PWM7
PWM8
PWM9
PWM10
PWM11
PWM12
PWM13
PWM14
PWM15
220R
R3A
R3B
R3C
R3D
R4A
R4B
R4C
R4D
R5A
R5B
R5C
R5D
R6A
R6B
R6C
R6D
JP3
JP4
JP5
PWM4
PINHD-3X4M_RIGHT
V+
BAT1
MD2_SCREW_35
Q1
NTD25P03L
C1
100u
16V
ENABLE
R1
10K